Model Based Engineering for the support of Models of Computation: The Cometa Approach

MPM 2011 at proceedings of MODELS 2011
October 16th, 2011

Papa Issa DIALLO, Joël CHAMPEAU**,** Vincent LEILDE
ENSTA Bretagne, 2 rue François VERNY 29806 Brest
papa_issa.diallo@ensta-bretagne.fr

Outline

- INTRODUCTION
- MOTIVATION
- COMETA APPROACH
- EXPERIMENTATION
- CONCLUSION

Introduction (1/3) : Context

- New systems **requires the integration of several technologies and tools** (video processing, wireless, software) combining **Hardware/ Software**

- Such **heterogeneity** increases **complexity** of their design and testing.

- **Solutions**:
  - **High level design of systems** (*raise the abstraction level of currently used languages in ESL*)
  - **Modular decomposition** of the systems
  - Early **validation of properties** and **performance analysis**

- **MBE proposes approaches for high level design**:
  - Separation of application concerns from platform concerns
  - Definition of several level of abstraction
  - Early property validation

Introduction (2/3) : Existing Approaches

- **Several known frameworks for heterogeneous systems Design**
  - Ptolemy, Modhel'X, Metropolis, Forsyde, BIP

- **MBE Technologies**:
  - UML, MARTE
  - SysML
  - DSLs/ DSMLs (AADL, Wright, etc)

- **Main Challenges**:
  - Adding execution semantics to models
  - More flexibility to the definition of execution semantics
  - Provide support for the interpretation of models (within different interconnected tools).

Introduction (3/3) : MBE Shortcomings

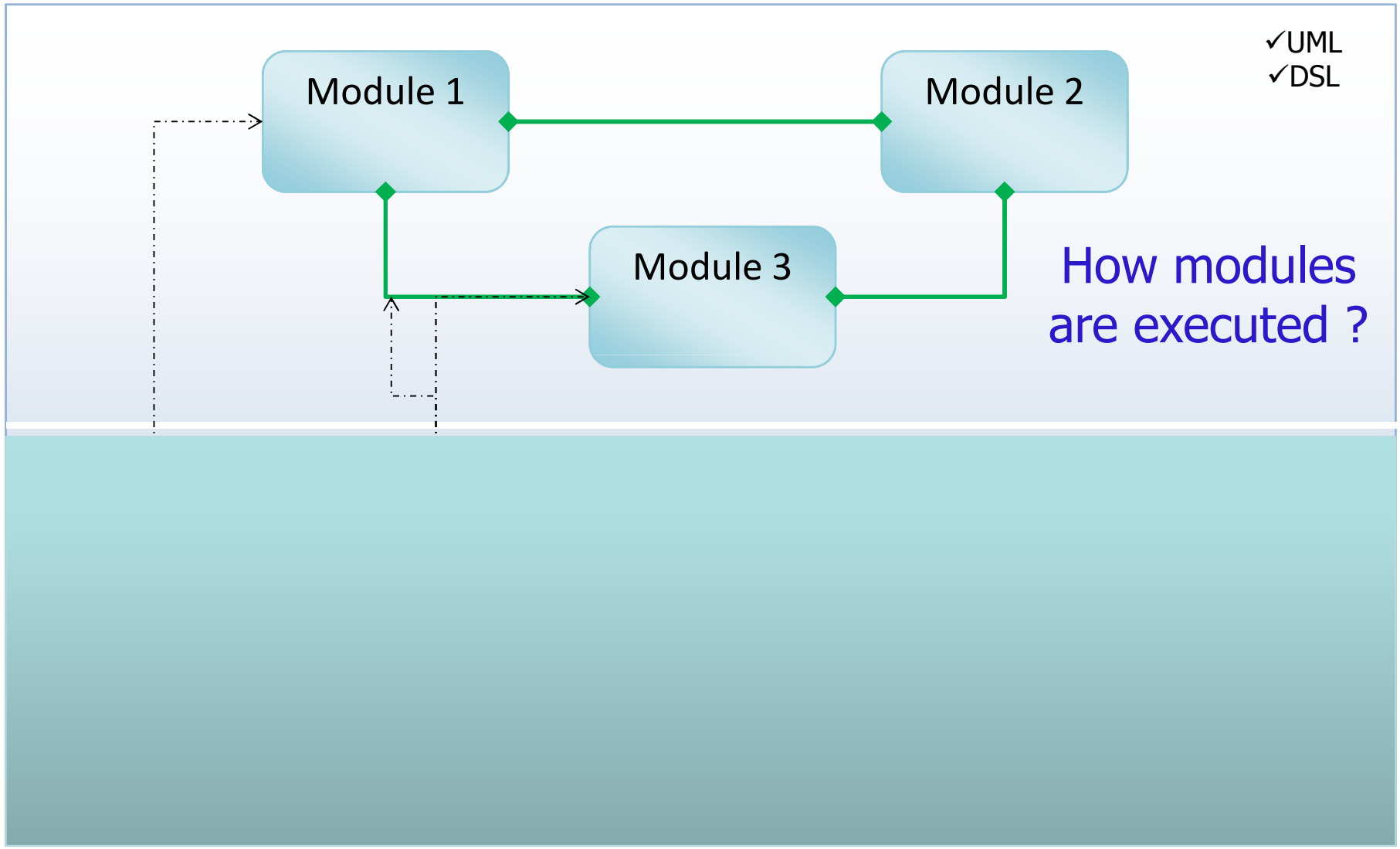

Motivation

- **Enrich models with semantics** (MoC) explicitly described
- Solution for describing **concurrency**, **communication**, **data**, and **time** at early design stages
- **Presented solution**: Cometa Metamodel for the description of :
  - Execution semantics (MoC)
  - Structure of systems
- Additional possibilities of Cometa:
  - Flexibility on the description of execution semantics.
  - Portability to different execution environment

Cometa Approach

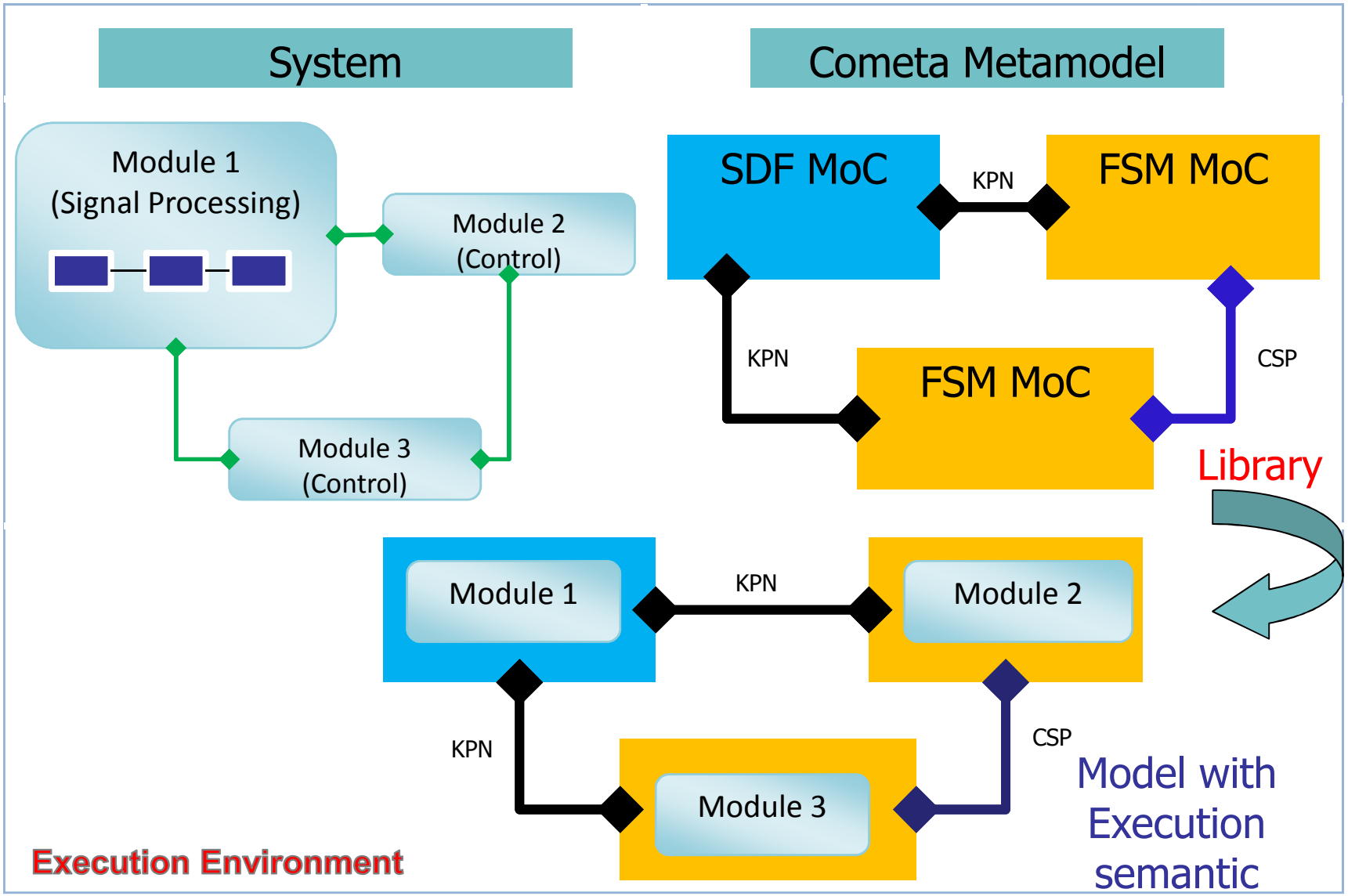

Cometa: MoC Description

- In Cometa, capture of MoC is **based on four concerns**:
  - Capture of **Behavioral properties**
  - Capture of **Communication properties**
  - Capture of **Data properties**
  - Capture of **Time properties**
- Inspired from the Rugby conceptual model defined by [Axel Jantsch]

Cometa: Behavioral concern

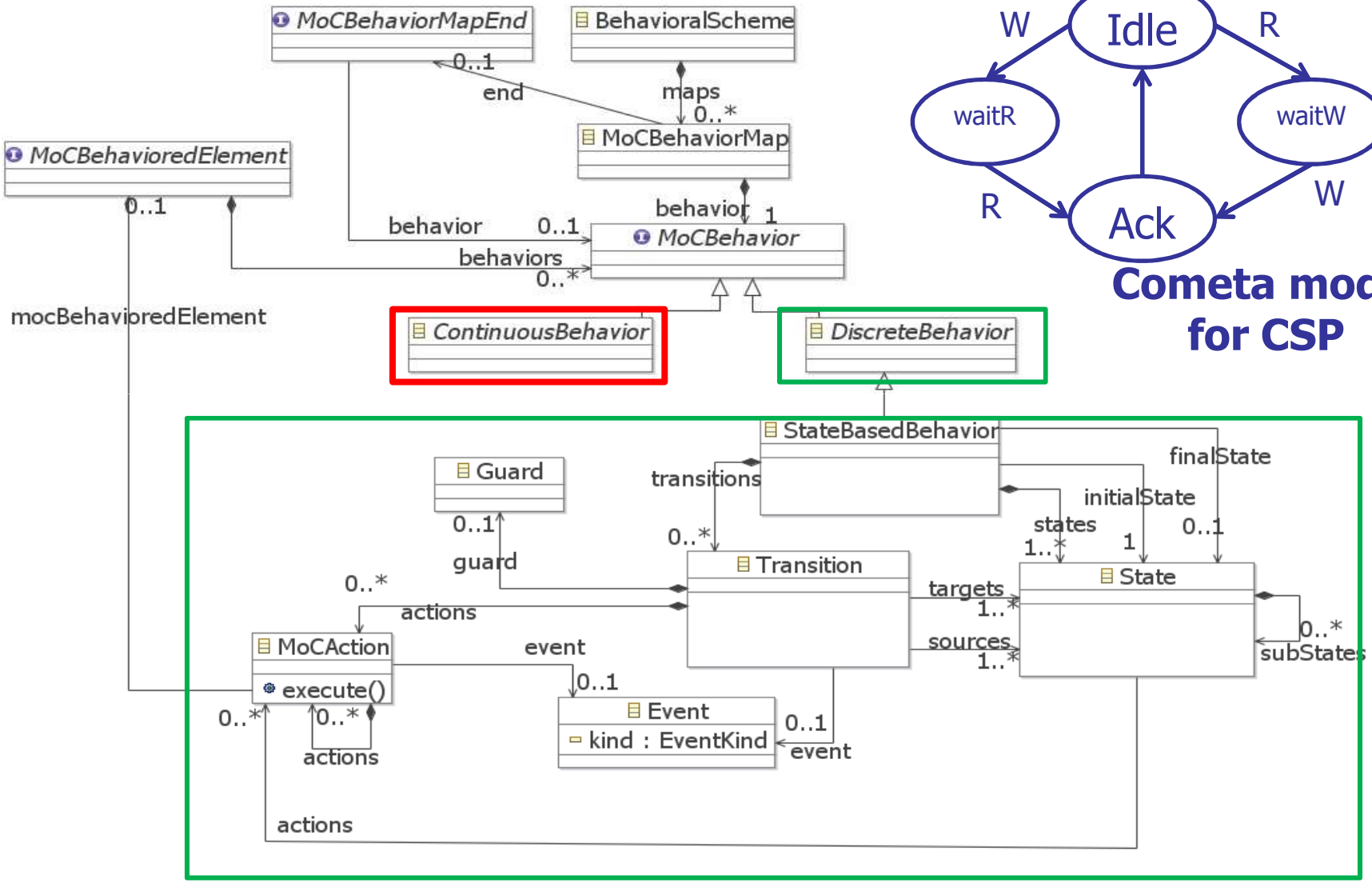

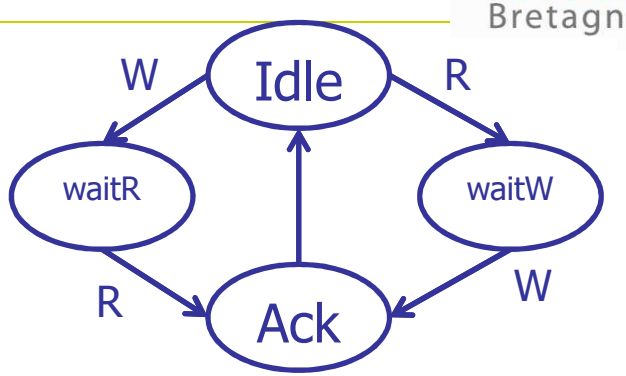

Cometa model for CSP

Cometa: Communication concern

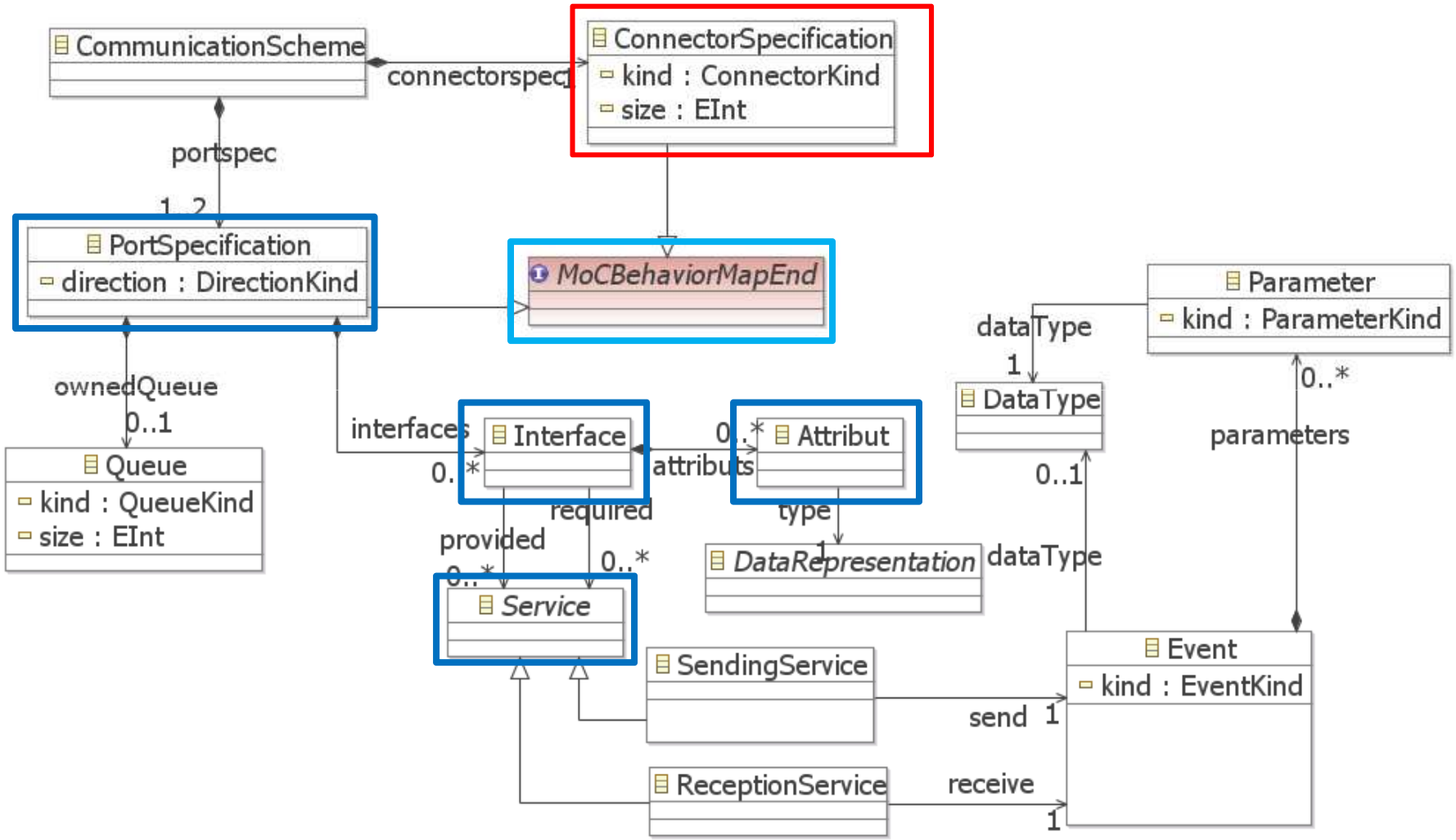

Cometa: Data concern

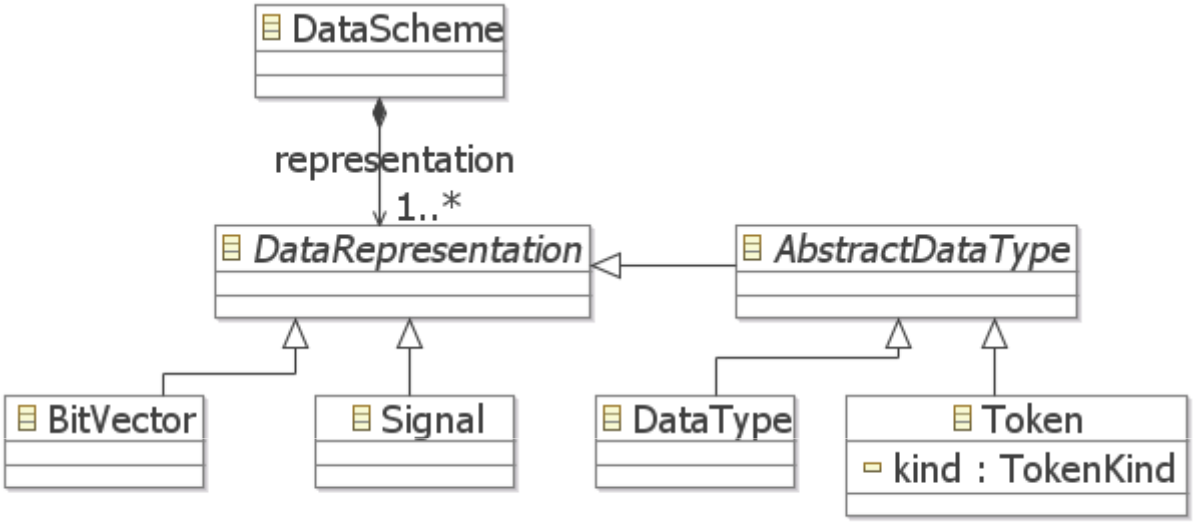

- Abstract data types can be refined to current known data types (Integer, String, etc)
- Specific Data representations such as Signals or BitVectors
- In this representation refinement is used to express more specific data types

Cometa: Time concern

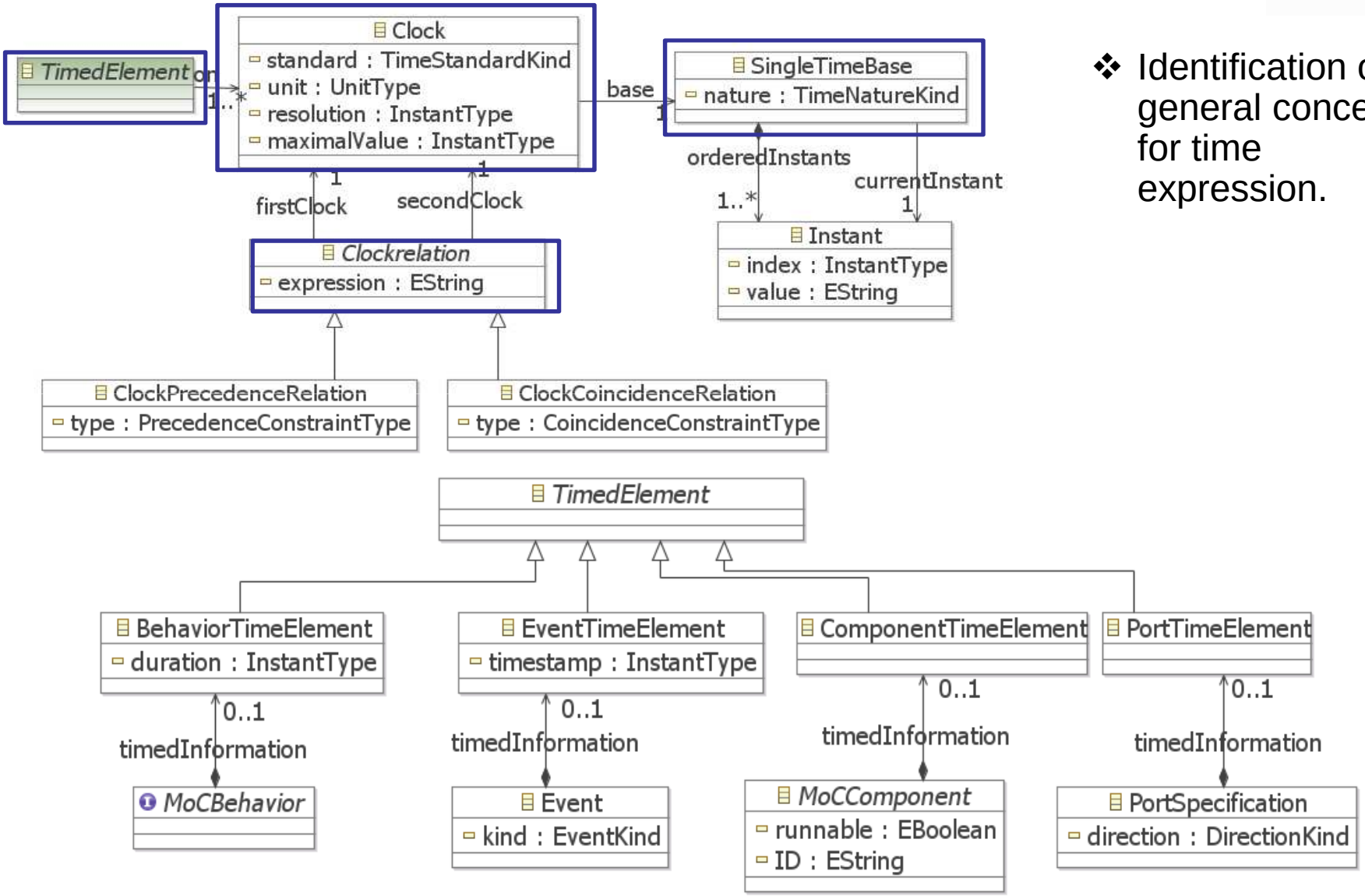

- Identification of general concepts for time expression.

Cometa: Structure Description

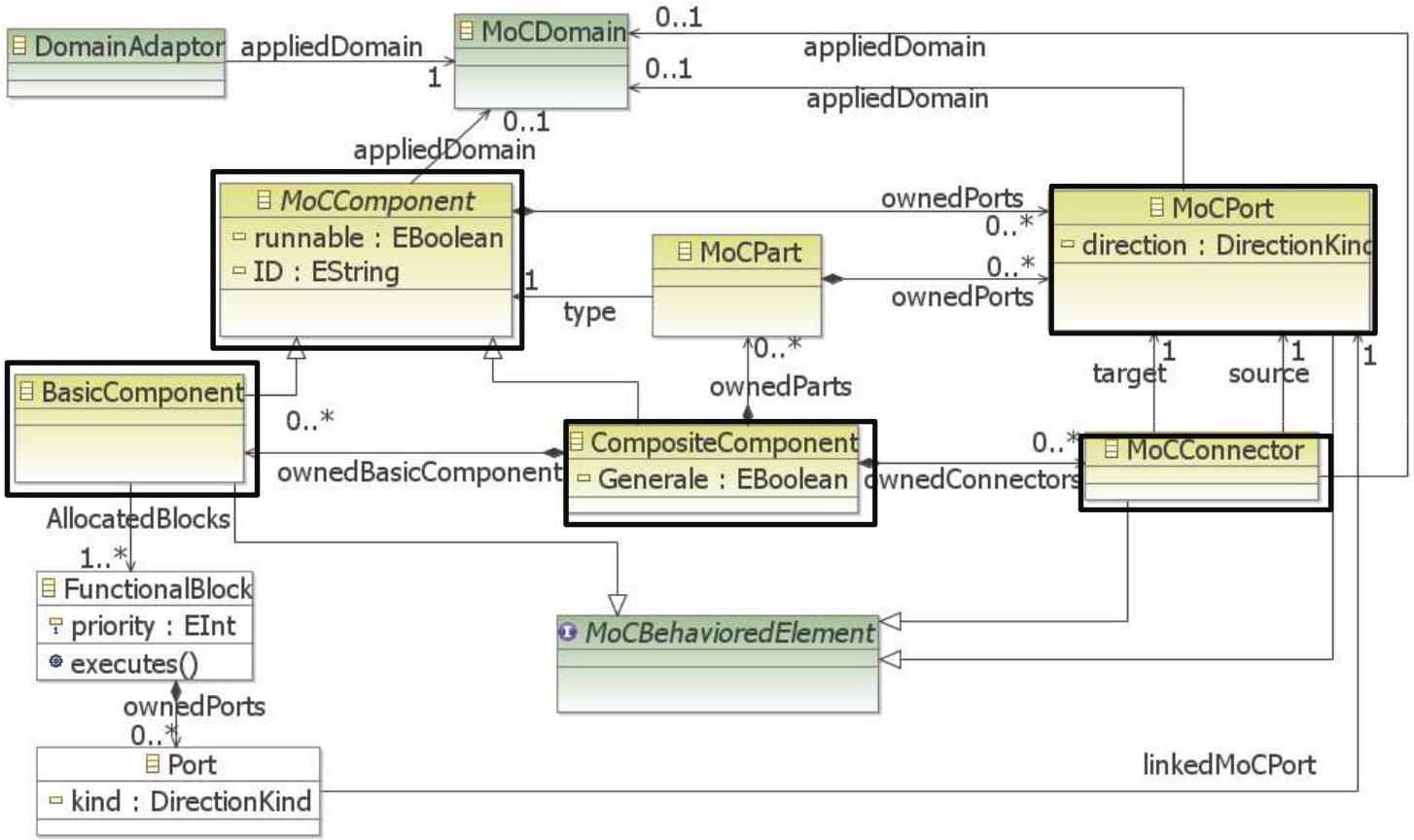

- A domain is applied to each semantic container (MoCComponent, MoCPort, MoCConnector)

Cometa: Translator

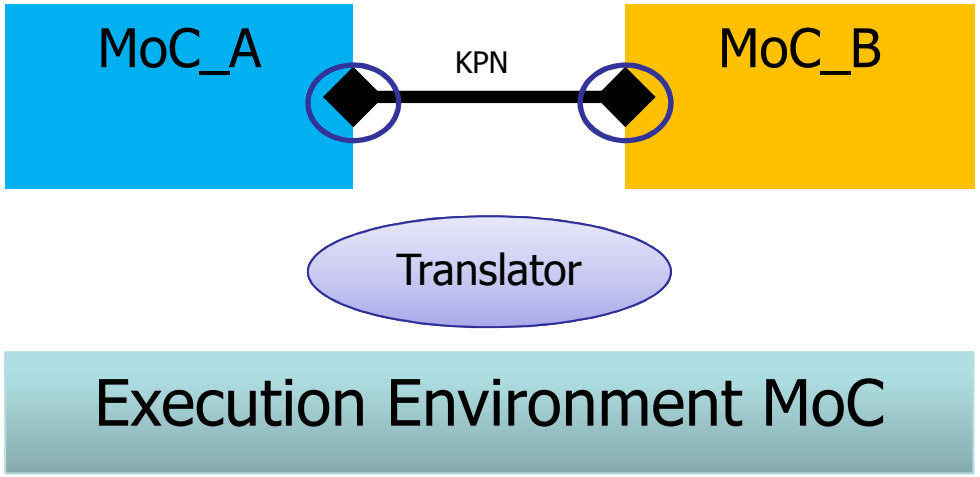

- Methodology to describe translators based on:
  - Input MoC semantics to Ouput MoC semantics
  - Classification of Models of Computation (E.Lee, S.Vincentelli)

Translation: MoC Classification

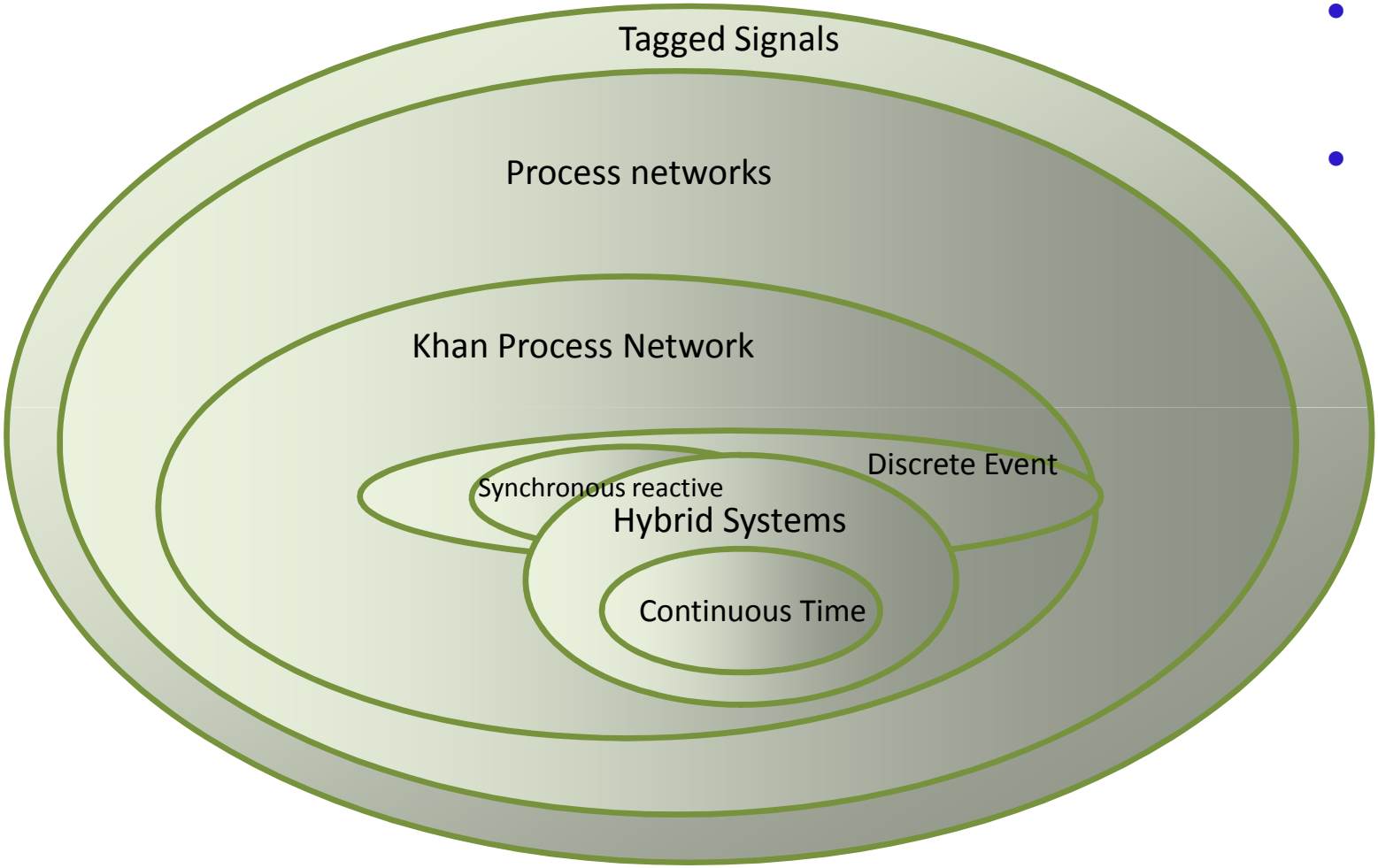

- From Less restrictive to more restrictive
- MoC can be classified according to their level of permissiveness

- [Ed. Lee S. Vincentelli]

Experiments

- Experiments to represent semantics such as CSP, KPN.
- Definition of an execution semantic for an UML model with Cometa
- Execution with 2 UML tools having different execution environment:
  - Rhapsody (DE based execution environment)
  - TopCased/UML with a java implementation of the framework

Experiments

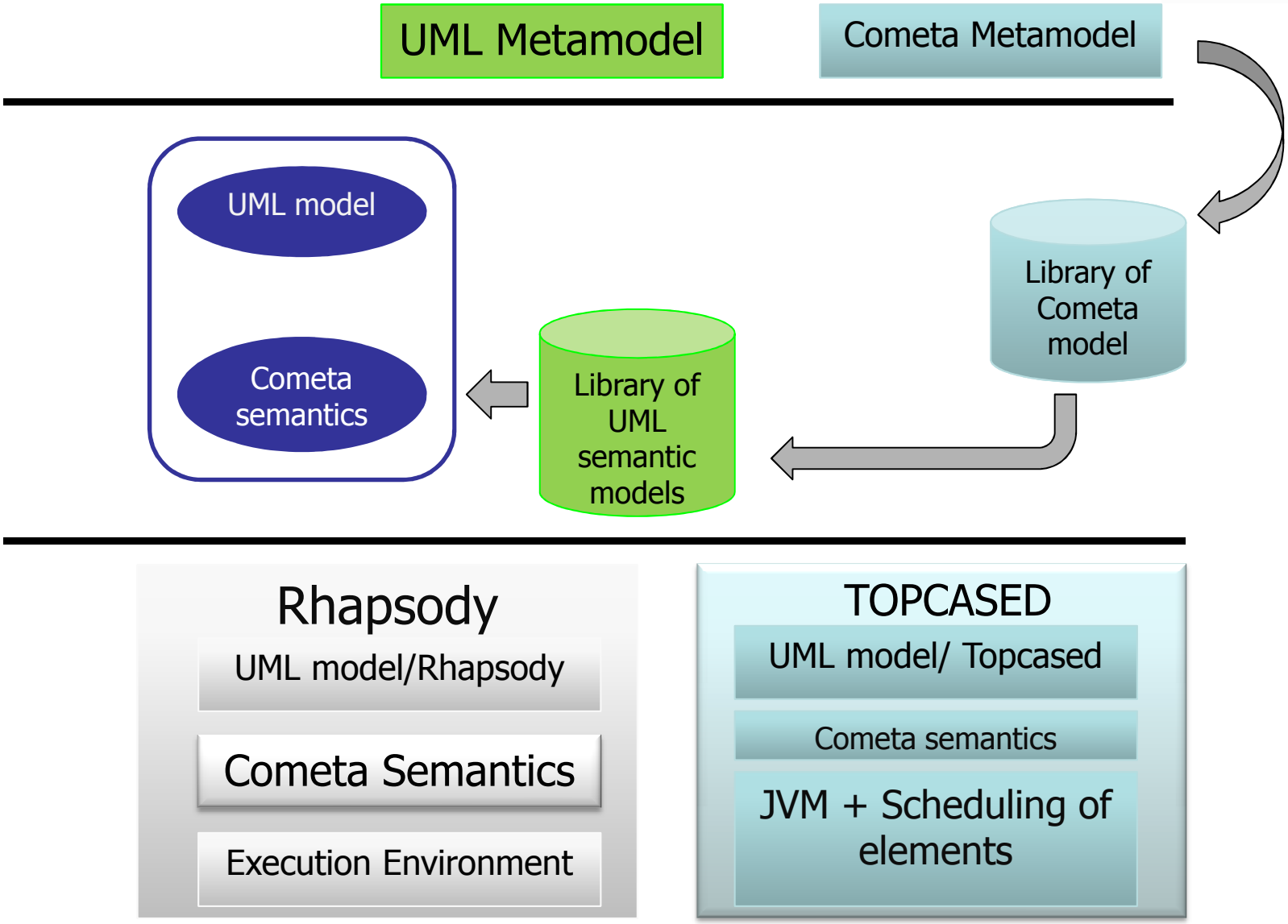

Experimentation: portability

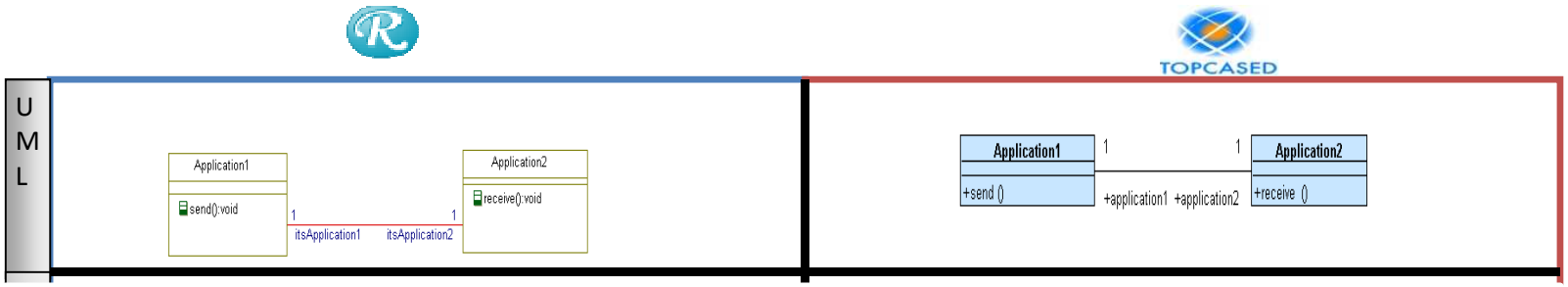

Experimentation: Simulation

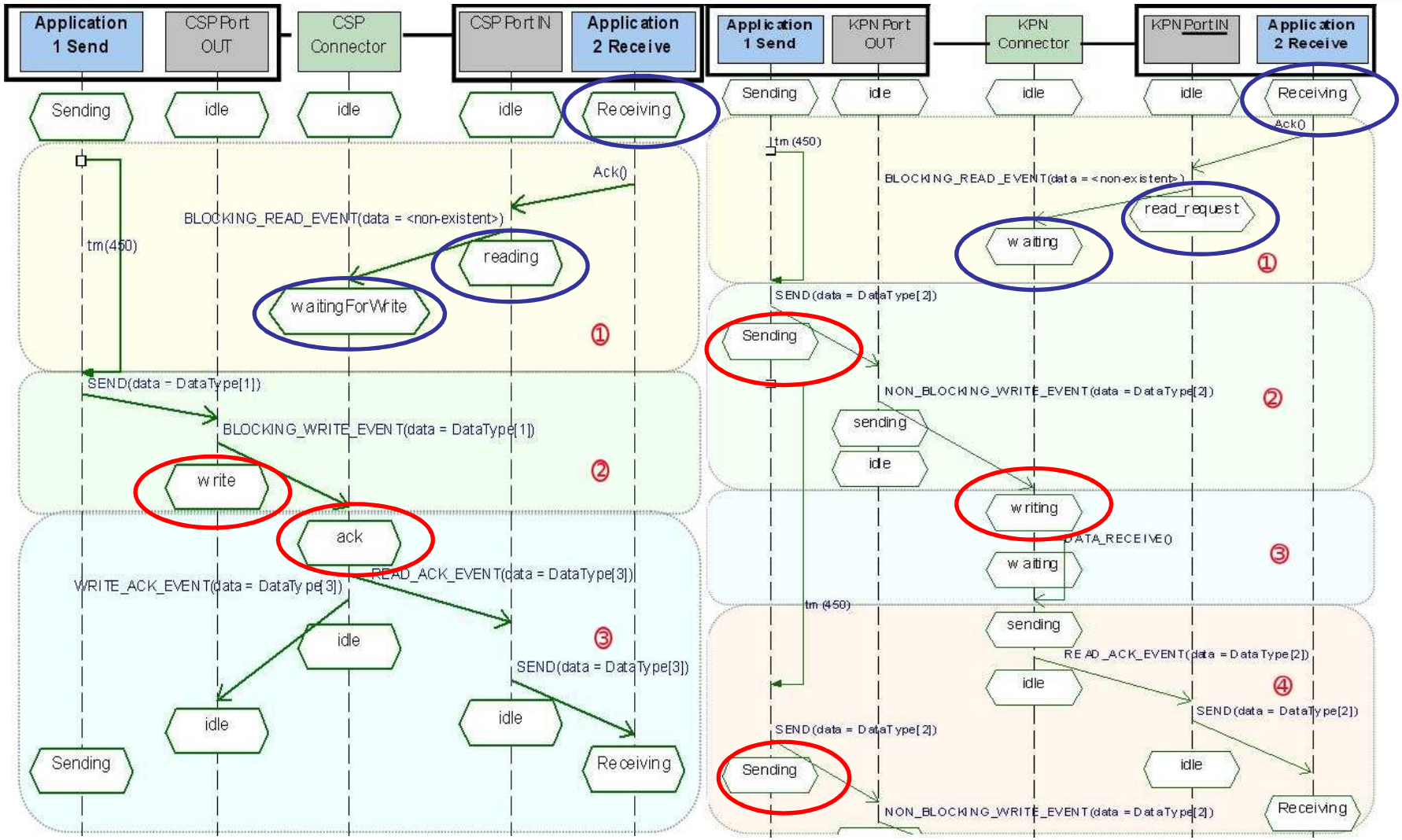

Conclusion

- Conclusion
  - MoC properties enrich models with semantics at different level of abstraction
  - Explicitly defining semantics add flexibility to target different execution environments (portability)
  - Composition of MoCs is still difficult to handle due to semantic constraints and number of MoCs possibly definable
- Future Works
  - Improving Cometa Metamodel
  - Model transformation to:
    - TimeSquare Framework for time aspects
    - SPEAR (Thales RT) an Array-OL based Framework – iFEST Project
    - iFEST project (Radar Model/ tool chain Rhapsody-SPEAR)

.

Questions

Thank you for your attention !